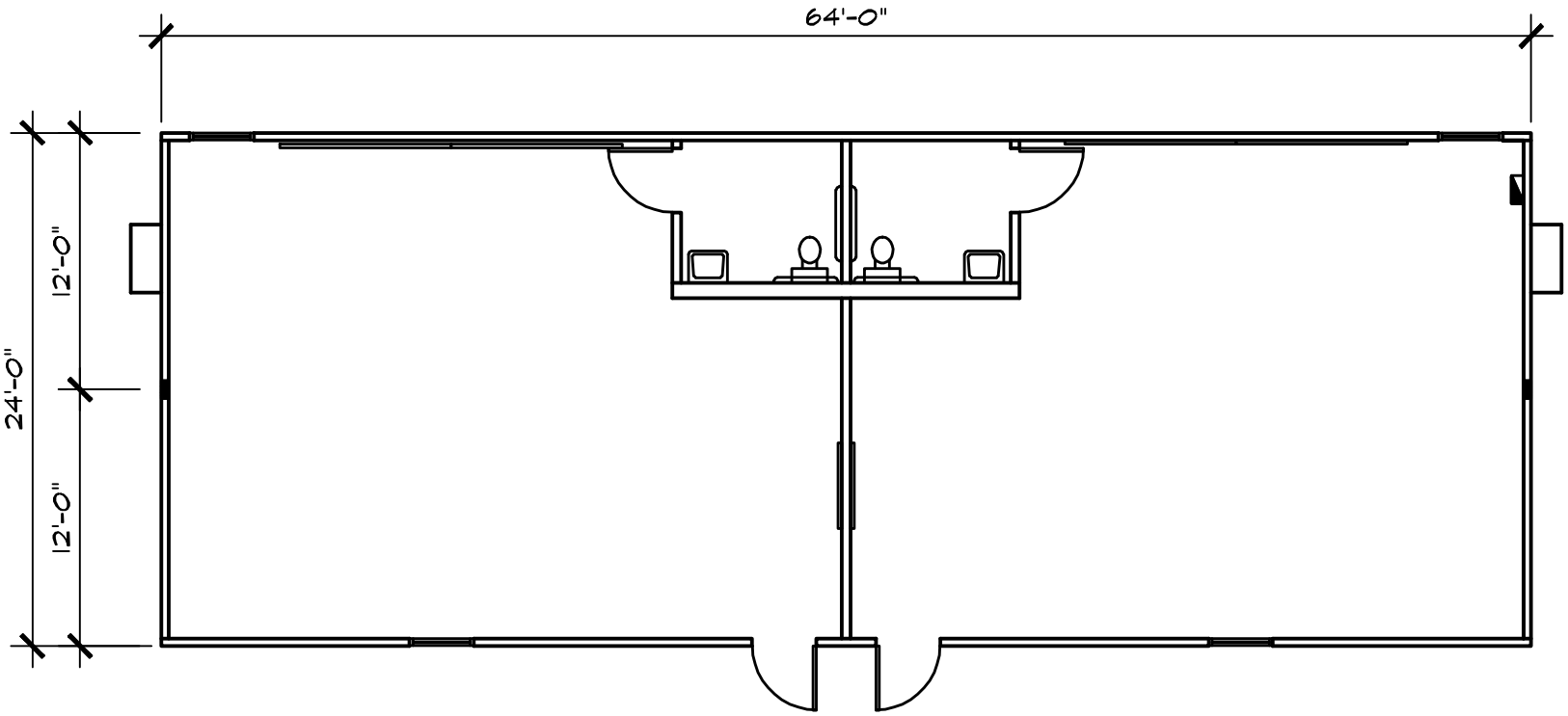

FLOOR PLAN

MARK	FLAN REVISIONS
1	
2	
3	
4	
5	
6	

© COPYRIGHT 2010 RAMTECH

RAMTECH Building Systems, Inc.

PROJECT: GSA

LOCATION: CA01 - 24' x 64' DBL. CLASSROOM W/RR

PROJECT NUMBER:

DATE: 10-29-10

DRAWN BY: DH

SHEET NO.

A1